HBrinker Mechanical Seal

Elastomer Bellows Mechanical Seal HBEG1

H-Brinker
www.HBrinker.com

Mechanical Seal HBEG1

TRANSEAL Mechanical Seal

Operating range

Shaft diameter: d1 = 14 … 110 mm (0.55" ... 4.33")

Pressure: p1 = 18 bar (261 PSI),

vacuum ... 0.5 bar (7.25 PSI), up to 1 bar (14.5 PSI) with seat locking

Temperature: t = -20 °C … +140 °C (-4 °F … +284 °F)

Sliding velocity: vg = 10 m/s (33 ft/s)

Admissible axial movement: ±2.0 mm (±0.08")

Materials

Seal face: Carbon graphite antimony impregnated (A), Carbon graphite resin impregnated (B), Silicon carbide (eSiC-Q7)

Seat: Silicon carbide (eSic-Q7, Q1)

Elastomer: NBR (P), EPDM (E), FKM (V), HNBR (X4)

Metal parts: CrNiMo steel (G), Hastelloy® (M)

Features

- For plain shafts
- Single and dual seal
- Elastomer bellows rotating
- Balanced
- Independent of direction of rotation

Recommended applications

- Fresh water supply
- Building services engineering
- Waste water technology
- Food technology
- Sugar production
- Pulp and paper industry
- Oil industry
- Petrochemical industry
- Chemical industry
- Water, waste water, slurries (solids up to 5 % by weight)
- Pulp (up to 4 % otro)
- Latex

Advantages

- 100 % compatible with MG1
- Small outer diameter of bellows support (dbmin) enables direct retaining ring support, or smaller spacer rings
- Optimal alignment characteristic through self-cleaning of disk/shaft
- Improved centering across entire
- pressure operating range
- No torsion on bellows
- Shaft protection over entire seal length
- Protection of seal face during installation due to special bellows design
- Insensitive to shaft deflections due to large axial movement ability
- Suitable for low-end sterile applications

Telegram: +3197010281216 WhatsApp: +3197010281216 Email: Info@Hbrinker.com

HBrinker Mechanical Seal

Elastomer Bellows Mechanical Seal HBEG1

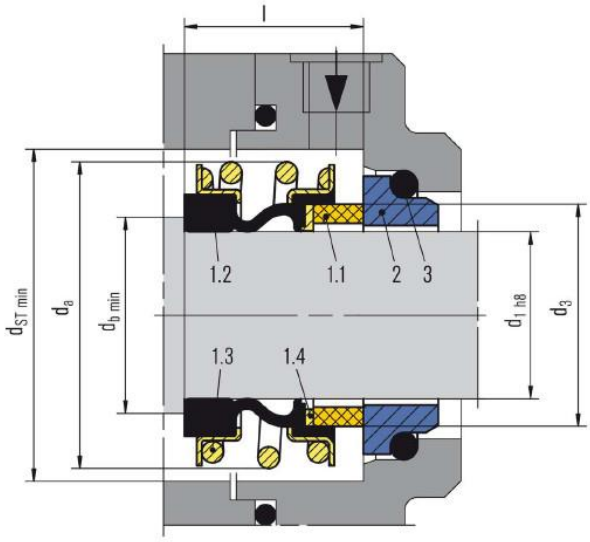

Item	Description
1.1	Seal face
1.2	Bellows
1.3	Set of springs
1.4	PEEK-PTFE disk
2	Seat (G6)
3	O-Ring or cup rubber

v

Seat alternatives

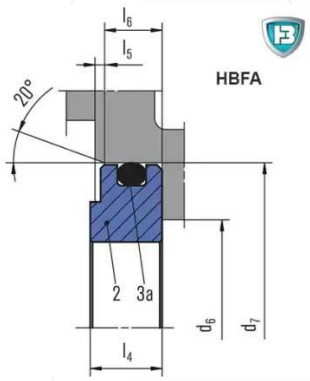

Seat G4

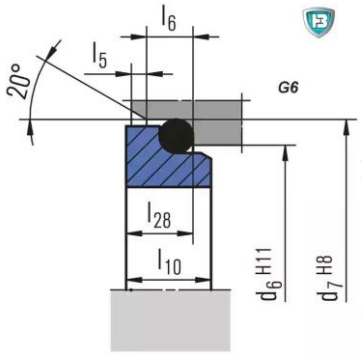

Seat G6

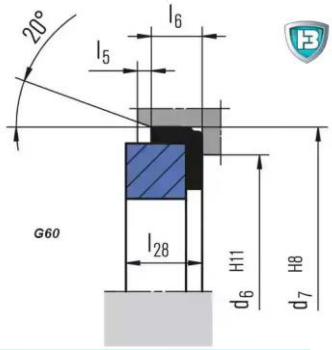

Seat G60

HBrinker Mechanical Seal

Elastomer Bellows Mechanical Seal HBEG1

www.HBrinker.com

Dimension Table in millimeter

d_1	d_3	d_6	d_7	d_{11}	d_{12}	d_a	d_b*)	d_{ST}	l_S	l	l_1	l_{1k}	l_2	l_{1N}	l_5	l_6	l_{10}	l_{12}	l_{14}	l_{15}	l_{16}	l_{28}	R
14	19.7	21	25	20.5	24.6	27	17.5	28.5	15	17	28.4	35	–	–	1.5	4	7.5	6.5	5.6	1.2	3.8	6.6	1.2
15	20.8	–	–	20.5	24.6	28.5	18.5	30	15	17	–	–	–	–	–	–	–	7.5	6.6	1.2	3.8	–	1.2
16	21	23	27	22	28	28.5	19.5	30	15	17	28.4	35	33.4	40	1.5	4	7.5	8.5	7.5	1.5	5	6.6	1.5
18	23.7	27	33	24	30	32	21.5	33	17	19.5	30	37.5	–	–	2	5	8.5	9	8	1.5	5	7.5	1.5
20	26.7	29	35	29.5	35	37	24	38	19	21.5	30	37.5	–	–	2	5	8.5	8.5	7.5	1.5	5	7.5	1.5
22	27.7	31	37	29.5	35	37	26	38	19	21.5	30	37.5	37.5	45	2	5	8.5	8.5	7.5	1.5	5	7.5	1.5
24	31.2	33	39	32	38	42.5	28	44	19	22.5	32.5	40	–	–	2	5	8.5	8.5	7.5	1.5	5	7.5	1.5
25	31.2	34	40	32	38	42.5	29	44	19	23	32.5	40	–	–	2	5	8.5	8.5	7.5	1.5	5	7.5	1.5
28	35	37	43	36	42	49	32	50	23	26.5	35	42.5	42.5	50	2	5	8.5	10	9	1.5	5	7.5	1.5
30	37	39	45	39.2	45	49	34	50	23	26.5	35	42.5	–	–	2	5	8.5	11.5	10.5	1.5	5	7.5	1.5
32	40.2	42	48	42.2	48	53.5	36	55	23.5	27.5	35	42.5	–	–	2	5	8.5	11.5	10.5	1.5	5	7.5	1.5
33	40.2	42	48	44.2	50	53.5	37	55	23.5	27.5	35	42.5	–	–	2	5	8.5	12	11	1.5	5	7.5	1.5
35	43.2	44	50	46.2	52	57	40	59	24.5	28.5	35	42.5	–	–	2	5	8.5	12	11	1.5	5	7.5	1.5
38	46.2	49	56	49.2	55	59	43	61	25	30	36	45	46	55	2	6	10	11.3	10.3	1.5	5	9	1.5
40	48.8	51	58	52.2	58	62	45	64	25.5	30	36	45	–	–	2	6	10	11.8	10.8	1.5	5	9	1.5
43	51.8	54	61	53.3	62	65.5	48	67	25.5	30	36	45	–	–	2	6	10	13.2	12	2	6	9	2.5
45	53.8	56	63	55.3	64	68	50	70	25.5	30	36	45	–	–	2	6	10	12.8	11.6	2	6	9	2.5
48	56.8	59	66	59.7	68.4	70.5	53	74	26	30.5	36	45	51	60	2	6	10	12.8	11.6	2	6	9	2.5
50	58.8	62	70	60.8	69.3	74	55	77	26	30.5	38	47.5	–	–	2.5	6	10.5	12.8	11.6	2	6	9.5	2.5
53	62.2	65	73	63.8	72.3	78.5	58	81	29	33	36.5	47.5	–	–	2.5	6	12	13.5	12.3	2	6	11	2.5
55	64.2	67	75	66.5	75.4	81	60	83	30	35	36.5	47.5	59	70	2.5	6	12	14.5	13.3	2	6	11	2.5
58	67.2	70	78	69.5	78.4	85.5	64	88	31	37	–	–	–	–	2.5	6	12	14.5	13.3	2	6	11	2.5
60	70	72	80	71.5	80.4	88.5	66	91	32	38	41.5	52.5	59	70	2.5	6	12	14.5	13.3	2	6	11	2.5
65	75	77	85	76.5	85.4	93.5	71	96	34	40	41.5	52.5	–	–	2.5	6	12	14.2	13	2	6	11	2.5
68	78	81	90	82.7	91.5	96.5	74	100	34	40	–	–	–	–	2.5	7	12.5	14.9	13.7	2	6	11.3	2.5
70	80	83	92	83	92	99.5	76	103	34	40	48.7	60	–	–	2.5	7	12.5	14.2	13	2	6	11.3	2.5
75	85.5	88	97	90.2	99	107	81	110	34	40	48.7	60	–	–	2.5	7	12.5	15.2	14	2	6	11.3	2.5
80	90.5	95	105	95.2	104	112	86	116	34	40	48	60	–	–	3	7	13	16.2	15	2	6	12	2.5
85	96	100	110	100.2	109	120	92	124	35	41	46	60	–	–	3	7	15	16	14.8	2	6	14	2.5
90	102	105	115	105.2	114	127	97	131	38	45	51	65	–	–	3	7	15	16	14.8	2	6	14	2.5
95	107	110	120	111.6	120.3	132	102	136	39	46	51	65	–	–	3	7	15	17	15.8	2	6	14	2.5
100	112	115	125	114.5	123.3	137	107	140	40	47	51	65	–	–	3	7	15	17	15.8	2	6	14	2.5
110	123	–	–	–	–	150	118	154	43	49	–	–	–	–	–	–	–	–	–	–	–	–	–