IRAN Seal

4EB – for KSB's Etanorm-R / Etaline-R type series

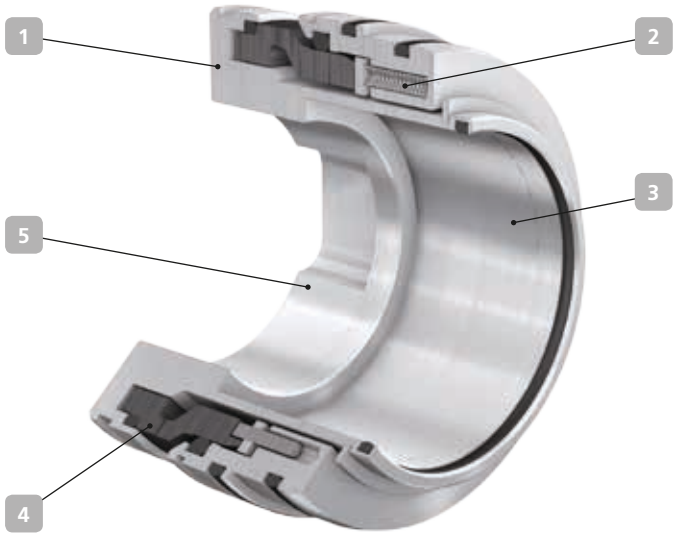

Applications:
drinking, service and hot water

1 Compact
Single modular mechanical seal, bi-directional and balanced. Tailored to the seal installation space and pump requirements.

2 Dependable
Stationary design, multiple springs located outside the fluid handled.

3 Versatile
For all operating conditions the pump is approved for.

4 Different material variants
Mating ring made of silicon carbide, "A" carbon (hot water) or "B" carbon Elastomers made of EPDM (also approved for drinking water to ACS/WRAS) or of FKM.

5 Service-friendly
The modular design facilitates installation with no need for assembly fixtures or adjusting dimensions, ensuring optimal pre-loading of the mechanical seal and low wear.

Technical description

Design	Single mechanical seal in modular design
Type	Stationary, balanced
Springs	Multi-spring arrangement
Direction of rotation	Bi-directional
Additional information	Approved for drinking water (WRAS)

Materials

Primary ring	SiC (Q1)
Mating ring	SiC (Q1) / "B" carbon (B) / "A" carbon (A)
Elastomers	EPDM (E) / FKM (V)
Springs	1.4571 (G)
Other Components	1.4122 (E)

Other material combinations on request

Technical data

Operating pressure	Up to 25 bar, dynamic Up to 37.5 bar, static
Temperature	-30 °C to 140 °C
Bearing bracket (seal size)	65 (065)
Business type	Standard (KSB EasySelect)