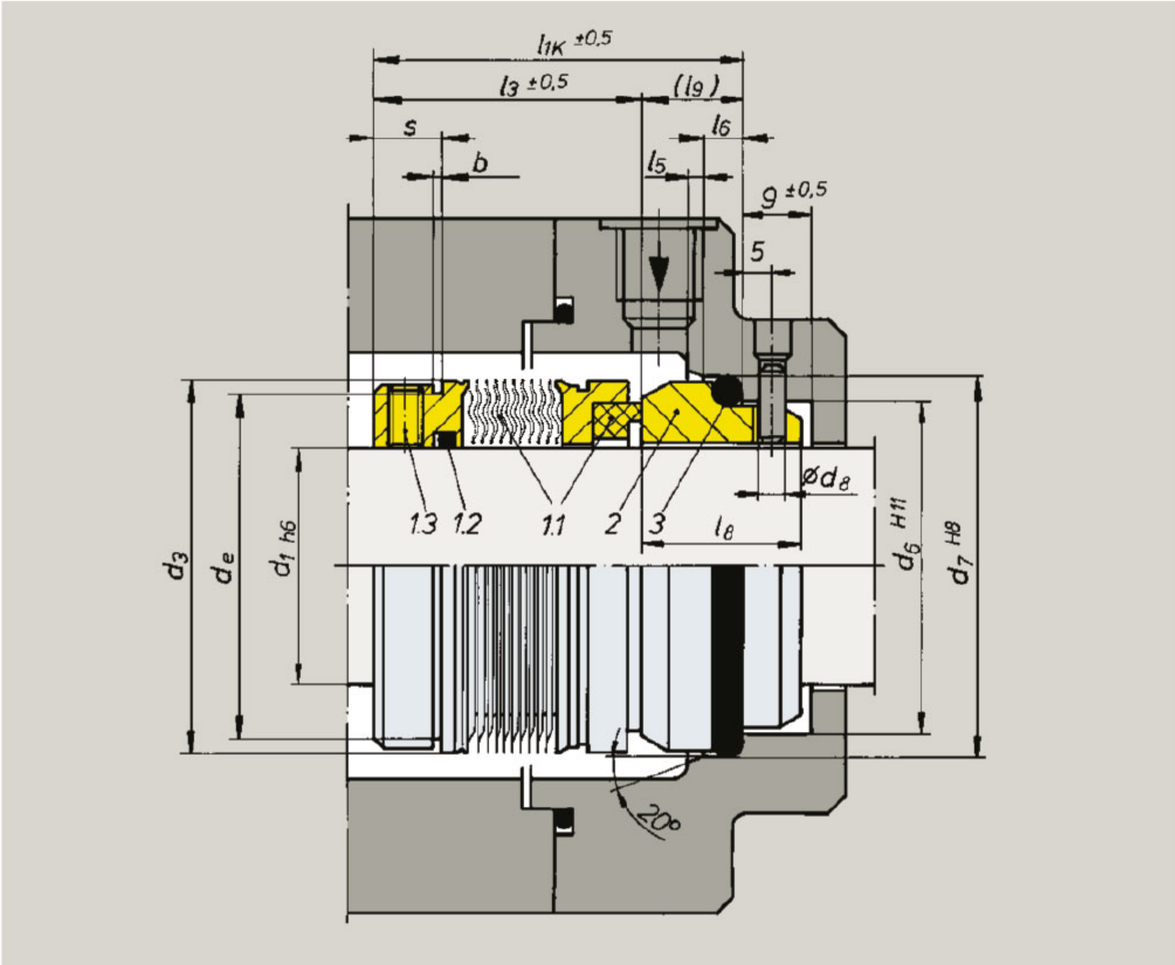

Produc Description

- 1,1-Seal face and metal bellows
- 1,2-O-Ring (For rotary seal)
- 1,3-Drive collar
- 1,6-Set Screws
- 2-Stationary Seat
- 3-O-Ring (For stationary seal)

Technical Features

- Single Seal
- Balanced
- Metal bellows Independent of rotation direction

Operating Range

- d1 = 16 - 100mm
- p = 25 bar
- t = -40 / 220 ˚C
- Vg = 20 m/sn

Material

- Rotary seal faces: Carbon, Silicon carbide, Tungsten Carbide
- Stationary seal faces: Chromuim Nickle 316 ti, Silicon carbide, Ceramic,Tungsten Carbide,
- Elastomers : Viton (FKM), EPDM,

Stationary Seat Alternatives

- G-16 G-9 G-4 G-6

IRAN Seal

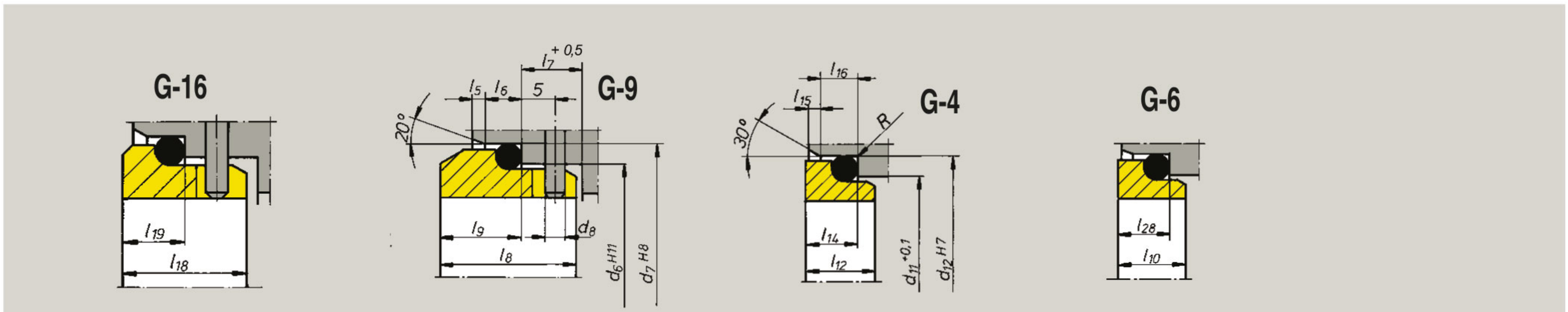

d_1	d_3	d_6	d_7	d_8	d_e	d_s	l_{1K}	l_3	l_5	l_6	l_8	l_9	l_{18}	l_{19}	b	s
16	30.0	23	27	3	25.0	38	42.5[1)]	32.5	1.5	4	17.5	10.0	–	–	1.6	9.0
18	32.0	27	33	3	28.0	39	37.5	30.5	2.0	5	14.0	11.5	15.0	7.0	1.6	10.0
20	33.5	29	35	3	29.5	41	37.5	30.5	2.0	5	14.0	11.5	15.0	7.0	1.6	10.0
22	36.5	31	37	3	32.0	44	37.5	30.5	2.0	5	14.0	11.5	15.0	7.0	1.6	10.0
24	39.0	33	39	3	34.5	47	40.0	28.5	2.0	5	19.5	11.5	15.0	7.0	1.6	8.2
25	39.6	34	40	3	35.5	48	40.0	28.5	2.0	5	19.5	11.5	15.0	7.0	1.6	8.5
28	42.8	37	43	3	38.5	51	42.5	31.0	2.0	5	19.5	11.5	15.0	7.0	1.6	9.0
30	45.0	39	45	3	40.5	53	42.5	31.0	2.0	5	19.5	11.5	15.0	7.0	1.6	8.5
32	46.0	42	48	3	42.0	55	42.5	31.0	2.0	5	19.5	11.5	15.0	7.0	1.6	9.2
33	48.0	42	48	3	43.0	56	42.5	31.0	2.0	5	19.5	11.5	15.0	7.0	1.6	9.2
35	49.2	44	50	3	45.5	58	42.5	31.0	2.0	5	19.5	11.5	15.0	7.0	1.6	9.5
38	52.3	49	56	4	48.0	61	45.0	31.0	2.0	6	22.0	14.0	16.0	8.0	1.6	9.2
40	55.5	51	58	4	50.0	64	45.0	31.0	2.0	6	22.0	14.0	16.0	8.0	1.6	9.2
43	57.5	54	61	4	53.0	67	45.0	31.0	2.0	6	22.0	14.0	16.0	8.0	1.6	9.2
45	58.7	56	63	4	55.0	69	45.0	31.0	2.0	6	22.0	14.0	16.0	8.0	1.6	9.5
48	61.9	59	66	4	58.0	72	45.0	31.0	2.0	6	22.0	14.0	16.0	8.0	1.6	9.2

d_1	d_3	d_6	d_7	d_8	d_e	d_s	l_{1K}	l_3	l_5	l_6	l_8	l_9	l_{18}	l_{19}	b	s
50	65.0	62	70	4	60.5	74	47.5	32.5	2.5	6	23.0	15.0	17.0	9.5	1.6	10.5
53	68.2	65	73	4	64.0	77	47.5	32.5	2.5	6	23.0	15.0	17.0	9.5	1.6	10.5
55	70.0	67	75	4	65.5	80	47.5	32.5	2.5	6	23.0	15.0	17.0	9.5	1.6	10.0
58	71.7	70	78	4	67.0	83	52.5	37.5	2.5	6	23.0	15.0	18.0	10.5	3.0	14.0
60	74.6	72	80	4	69.5	85	52.5	37.5	2.5	6	23.0	15.0	18.0	10.5	3.0	14.0
63	79.0	75	83	4	72.5	88	52.5	37.5	2.5	6	23.0	15.0	18.0	10.5	3.0	14.0
65	84.1	77	85	4	78.0	95	52.5	37.5	2.5	6	23.0	15.0	18.0	10.5	3.0	14.0
68	87.3	81	90	4	82.0	96	52.5	34.5	2.5	7	26.0	18.0	18.5	11.0	1.6	10.0
70	87.3	83	92	4	81.0	96	60.0	42.0	2.5	7	26.0	18.0	19.0	11.5	3.0	17.0
75	95.0	88	97	4	87.0	104	60.0	42.0	2.5	7	26.0	18.0	19.0	11.5	3.0	16.0
80	98.4	95	105	4	91.0	109	60.0	41.8	3.0	7	26.2	18.2	19.0	11.5	3.0	16.0
85	104.7	100	110	4	96.0	114	60.0	41.8	3.0	7	26.2	18.2	19.0	11.5	3.0	16.0
90	111.0	105	115	4	103.0	119	65.0	46.8	3.0	7	26.2	18.2	20.5	13.0	3.0	21.0
95	114.0	110	120	4	106.0	124	65.0	47.8	3.0	7	25.2	17.2	20.5	13.0	3.0	21.0
100	117.4	115	125	4	111.0	129	65.0	47.8	3.0	7	25.2	17.2	20.5	13.0	3.0	20.0